Fuel bed	Dimension X
Metal	304mm
Log	354mm

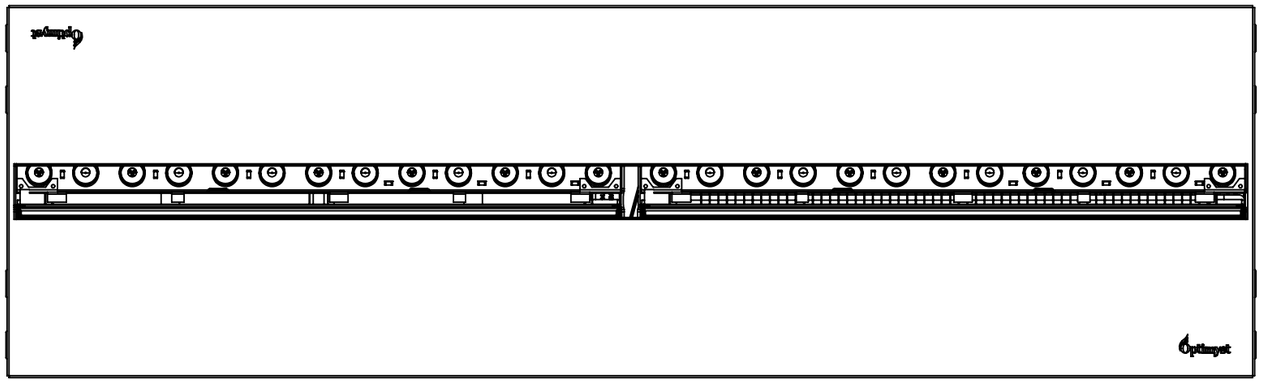

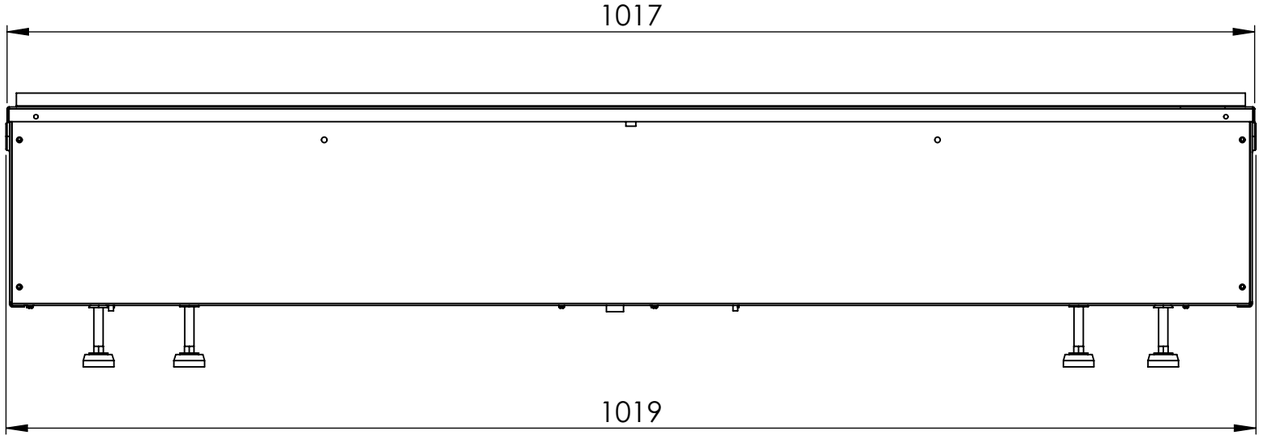

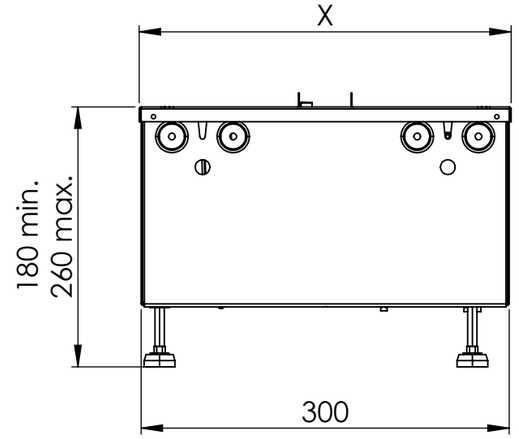

ISSUE	MODIFICATIONS	OCN	APPD	DATE

NOTES

Item number EU: 400001277

DO NOT SCALE

IF IN DOUBT ASK

THIRD ANGLE PROJECTION

GlenDimplex Flame Europe

INNOVATION & DEVELOPMENT

Heerenveen, Netherlands
T: +31 513 656 500 | E: info@glendimplex.eu

DRAWN BY	DATE	SCALE 1:5	HOLE TOL +/- 0.05	GEN TOL 0 +/- 0.4
APP'D BY	DATE	DIM IN mm	ANGLES +/- 0.5°	0.0 +/- 0.2 0.00 +/- 0.1

MATERIAL

FINISH

R.o.H.S.

All material must comply with the requirements of European Directive 2015/863/EU on the restriction of the use of certain hazardous substances.

THIS DRAWING IS SUPPLIED IN CONFIDEN CE AND THE COPYRIGHT THEREOF IS THE PROPERTY OF GLEN DIMPLEX : IT MUST NOT BE USED BY A THIRD PARTY WITHOUT PRIOR PERMISSION. © 2023

PROJECT

TITLE Dimensional drawing

GDB NO

DRG NO Cassette 1000 multi (Retail)

A3

Sheet 1 of 1