OPAL

INSTALLATION MANUAL (ENGLISH)

RAIS®

attika®
FEUERKULTUR

ENG

PRODUCTION NUMBER

The production number can be found behind the door on the right side of the stove base and on the first page of the user manual.

THIS MANUAL APPLIES TO THE FOLLOWING MODELS:

- OPAL

PRODUCTION NUMBER 2
INSTALLATION MANUAL 4
Malfunctions 5

TECHNICAL DATA 6
Specifications 6

INSTALLATION DISTANCE 8
Installation distances for non-combustible walls 8
Installation distances at combustible walls 9

DIMENSIONAL SKETCHES 10

INSTALLATION 12
Recycling of packaging 12
Packaging at delivery 13
Height adjustment 13
Installation of smoke outlet 14
Mounting/changing the handles 14
Removing the combustion chamber lining 15
Heat accumulation stones 15

EXTERNAL AIR CONNECTION - AIRSYSTEM 16
Air connection on the back 16
Air connection at the bottom 17

CLEANING AND MAINTENANCE 18

SPECIAL PRECAUTIONS FOR INSTALLATION IN UK 19

Revision: 0
Date: 11-09-2025

We reserve the right to make printing errors.

ENG

INSTALLATION GUIDE
Thank you for choosing your new RAIS or ATTIKA product! This installation instructions manual will ensure that your stove is installed correctly and that it will provide you with comfort and pleasure for many years to come.

GENERAL
It is important to correctly install the stove out of consideration for both the environment and personal safety. The installation must comply with all local rules and regulations, including those that refer to national and European standards. A certified chimney sweeper should be contacted before set-up. No unauthorised alterations may be made to the stove.

Upon receipt, inspect the stove for any transport damage. Do not install the stove until you have checked it thoroughly.

FLOOR CONSTRUCTION
The floor structure must be able to support the weight of the stove and a chimney, if required. If the existing floor structure does not meet this requirement, suitable measures must be taken (e.g. installation of a load distribution plate). If in doubt, contact a building expert.

National and local regulations must be complied with, including the size of the non-flammable plate that must cover the flammable floor in front of the stove to protect the floor from falling embers.

DISTANCE TO COMBUSTIBLE MATERIAL
The stove must be positioned at a safe distance from flammable material. Due to risk of fire, flammable items (e.g. furniture) may not be positioned closer to the insert than specified in the sections on placement. When deciding where to install your RAIS/ATTIKA stove, you should consider being able to heat other rooms in your home to get the most out of your new stove.

VENTILATING SYSTEMS
The stove needs permanent and sufficient air to operate safely and efficiently. A permanent air supply can be installed in the room for the stove's combustion air - through the AirSystem connection. Under no circumstances should this air supply be closed during operation. Note that any mechanical extraction such as a cooker hood can reduce the air supply. The stove has an air consumption of min. 14.5 m^3/h.

CHIMNEY
As a minimum, the chimney must be constructed of T400-N1-D-50050-G100 flue pipe, and be tall enough that the draft conditions are in order, i.e. 12 pascal to 18 pascal. If the recommended chimney draught cannot be achieved, problems of smoke puffing from the door may arise when heating. The collar is 147 mm in diameter. Remember: there must be unobstructed access to the access door on the chimney.

If the draught is too strong, it is advisable to equip the chimney with a regulating damper. If a regulating damper is fitted, you must ensure that there is a free flow-through area of at least 20 cm^2 when the regulating damper is closed.

The length of the chimney, calculated from the top of the stove should not be less than 3 metres and must be at least 80 cm above the roof ridge. If the chimney is placed on the side of the house, the top of the chimney must never be lower than the roof ridge or the roof's highest point. Note that there are often national and local regulations relating to houses with thatched roofs.

Always make sure to comply with applicable standards (EN 15287-1:2023 and EN 15287-2:2023) for chimney installation. It is also important to check the correct functioning of the chimney according to EN 13384-2:2015+A1:2019 based on the individual solution on site.

ROOM SIZE
Room size requirements apply to the product with the type designation CA. Type CA refers to room sealed stoves with a self-closing door that has been tested for tightness. The room in which the stove is installed must be at least 42 m^3. The type of stove can be seen on the supplied CE label.

ATTENTION!
The appliance shall not be installed with ventilating systems which have pressure below -15 Pa.

ATTENTION!
Before the stove may be put to use, the set-up must be reported to your local chimney sweeper.

ATTENTION!
RAIS/ATTIKA recommends having the appliance installed by an authorised technician. Please ask your dealer for further information.

MALFUNCTIONS
If you are experiencing disturbances, some of the most common causes are listed below.

SMOKE SPILLAGE AROUND THE DOOR
- This may be due to insufficient draft in the chimney <12Pa
- Check whether the flue or chimney is blocked
- Check whether the hood is switched on and, if so, switch it off and open a window / door near the stove for a short period.

SOOT ON GLASS
- Excessively wet firewood
- The damper regulation is too low
- Ensure proper heating of the stove when lighting, prior to closing the door

STOVE IS BURNING TOO STRONG
- Leak around the door seal
- Chimney draft too large >18 Pa, draft regulator should be installed.
- The damper is not regulated down enough

STOVE IS BURNING TOO WEAK
- Insufficient wood
- Insufficient air supply for room ventilation
- Unclean smoke flue
- Leaky chimney
- Leakage between chimney and flue

INSUFFICUENT DRAUGHT IN THE CHIMNEY
- Insufficient temperature difference, e.g., due to poorly insulated chimney
- High outside temperature, e.g., in the summer
- Absence of wind
- The chimney is too low and sheltered
- Leaks or other false air in the chimney
- Chimney and flue clogged
- The house lacks ventilation (lack of fresh air supply)
- Negative smoke extraction (poor draft conditions)

With a cold chimney or severe weather conditions, the poor draught can be compensated by supplying the stove with more air than usual.

If the interuptions persists, we recommend that you contact your RAIS dealer or chimneysweep.

SPARE PARTS
You can view the spare parts we offer by scanning the QR code if you need new ones for your product. The warranty disappears if replacement parts are used that are not recommended by RAIS. Your RAIS dealer is able to provide spare parts for all interchangeable parts.

ENG

SPECIFICATIONS				
DTI Ref.: 300-ELAB-2324-EN				OPAL
RAIS		Nominal		Standard: EN16510-2-1:2022
		Wood logs		Fuel
P	kW	5.8		Nominal heat output
P_{SH}	kW	5.8		Space heat output
η	%	≥ 75		Efficiency
η_s	%	≥ 65		Seasonal space heat efficiency
EEI	-	106	Class A	Energy efficiency index
CO (13% O_2)	mg/Nm³	≤ 1500		CO emission at 13 % oxygen content
NO_x (13% O_2)	mg/Nm³	≤ 200		NO_x emission at 13 % oxygen content
OGC (13% O_2)	mg/Nm³	≤ 120		Hydrocarbon emision at 13 % oxygen content
PM (13% O_2)	mg/Nm³	≤ 40		Particulate matter emision at 13 % oxygen content
p	Pa	12		Minimum flue draught
T_s	°C	328		Flue gas outlet temperature at the flue pipe collar
Tclass	-	T400 G		Chimney designation according to the appropriate chimney standard
Φ_{fg}	g/s	5.2		Flue gas mass flow
V_h	m³/h	0		Standing air loss
CON or INT	-	INT		Intermittent operation (INT)
t	min	49		Fuelling time
M_a	kg	1.4		Recommended wood quantity when filling (Divided into 2-3 pieces of firewood)
d_{out}	mm	150		The diameter of the flue pipe collar
L, W, H	mm	L 418, W 466, H 1930		Overall dimensions of the appliance (length, width, height)
L_C, W_C, H_C	mm	340/254/510		Combustion chamber (length/width/height)
m	kg	227		Mass of the appliance
m_{chim}	kg	20		Maximum load of the chimney
Type	-	CA		Appliance intented to be supplied with cumbustion air via a combustion air duct

RATING PLATE

All RAIS/attika stoves have a rating plate indicating the stove's distance to combustibles, efficiency etc. The nameplate can also be found by scanning the QR code.

FRONT MODEL

Set-up distances			
d_R	mm	100	Minimum distance from the back of the stove to combustible material
d_S	mm	350	Minimum distances from the sides to combustible material
d_c	mm	400	Minimum distance from the top to combustible material at the ceiling
d_P	mm	900	Minimum distances from the front to combustible material (Distance to furniture)
d_F	mm	0**	Minimum distances from the front to combustible material in bottom front radiation area
d_L	mm	0**	Minimum distances from the front to combustible material in side front radiation area
$d_{B'}$	mm	210	Minimum distance from the bottom edge of the door to the floor.
d_{non}	mm	50	Minimum distances to non-combustible walls
📖			Read and follow the user operating instructions

**0 mm: Since 65 K is not exceeded by rasiation on the floor in front and/or on the side wall. Cf. EN16510 Note 3.

Read the section about installation distances in the installation guide.

The stove was tested and approved by:
DTI - Danish Technological Institute
Teknologiparken Kongsvang Allé 29
8000 Aarhus C, Denmark
www.dti.dk
Tel.: +45 7220 2000,
Fax: +45 7220 1019

SHARED FLUE
IMPORTANT! it is **NOT** allowed to connect multiple stoves to the same chimney in the **UK**.

In other countries it is permitted to connect several stoves to the same chimney, provided that the two stoves have the same owner, as in an example where a house has two floors with one stove in the living room and one on the first floor. It is a requirement that the inlets must be positioned so that there is a clearance difference between them of at least 250 mm.

IN CASE OF MARKET CONTROL
The specifications are based on nominal test results. During the nominal test, an ignition and two pre-fires to generate a basic glow layer of approximately 320 g prior to the test firing. The test firing includes 1.4 kg of two pieces of firewood, the door is closed immediately after filling. From here, approximately 5 test cycles are carried out, each of which ends when the weight reaches about 50 g. The weight at the end of the cycle must not differ by more than 100 grammes from the previous cycle.

The user manual includes a more detailed description of how to conduct the nominal test.

DECLARATION OF PERFORMANCE

DECLARATION OF CONFORMITY

ENG

To clarify whether the stove installation wall is flammable or otherwise, contact your building architect or local building authorities. Please make sure that objects made of combustible materials (such as furniture) are not placed closer than the distances indicated in the following tables (fire risk).

MINIMUM DISTANCE FOR CEILINGS AND FLOORS
Distance to ceiling from the top of the stove min. 400 mm. Distance to the floor from the door bottom is minimum 210 mm.

IMPORTANT
Please bear in mind that the installation distances on the following pages only apply to the wood-burning stove. The final choice of Chimney solution may have a larger safety distance to the flammable material. The Chimney solution must always be installed in accordance with current building regulations and in a manner that ensures CE-marking compliance. Always make sure to follow all local precautions, including those referring to national and European standards.

INSTALLATION DISTANCE IN CASE OF NON-COMBUSTIBLE WALL
We recommend a minimum distance to non-combustible material of **50 mm** for cleaning purposes.

OPAL

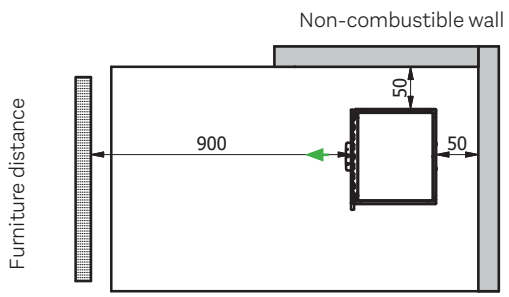

CORNER SET-UP

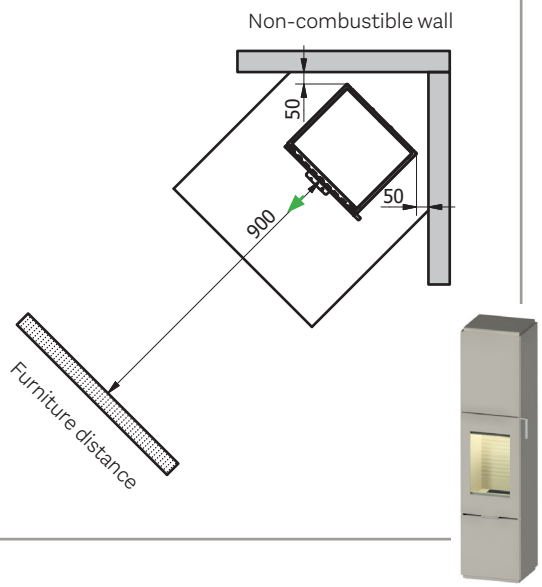

OPAL

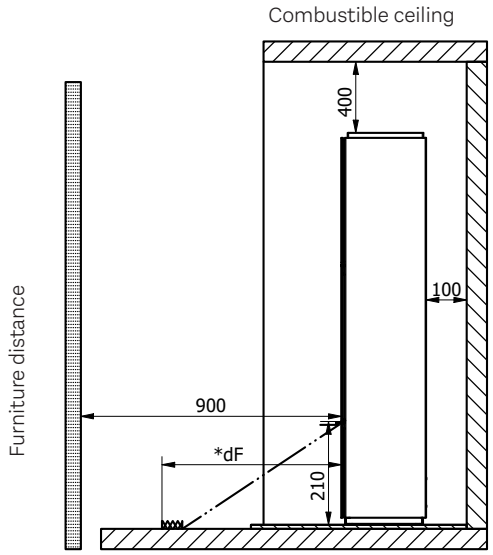

*0 mm: As 65 K is not exceeded by radiation on the floor in front and/or on the side wall.

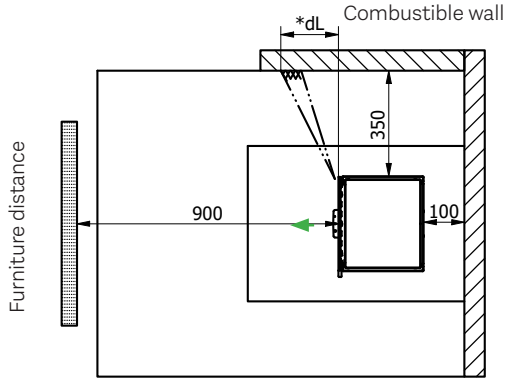

CORNER SET-UP

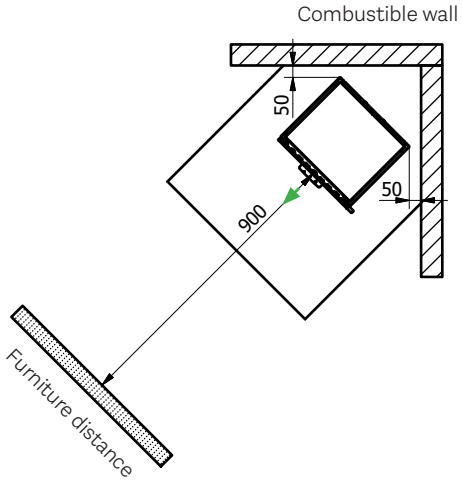

ENG

ENG

DIMENSIONAL SKETCH: OPAL (B/O)

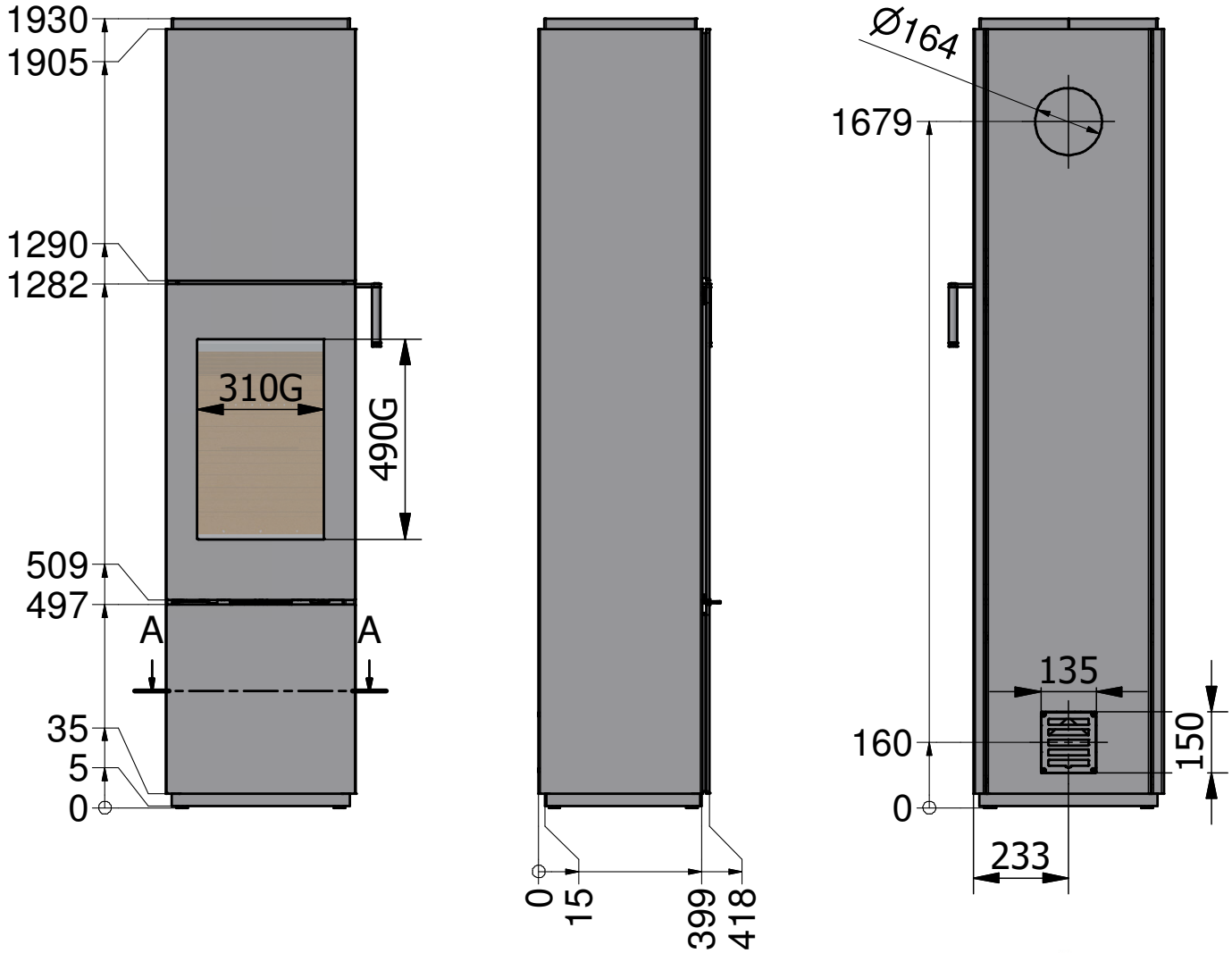

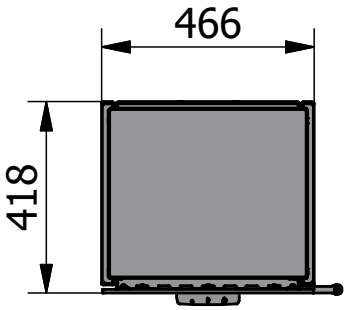

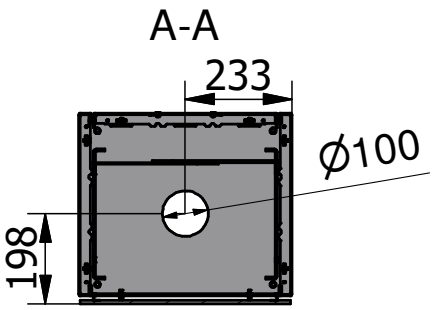

DIMENSIONAL SKETCH: OPAL (T/O)

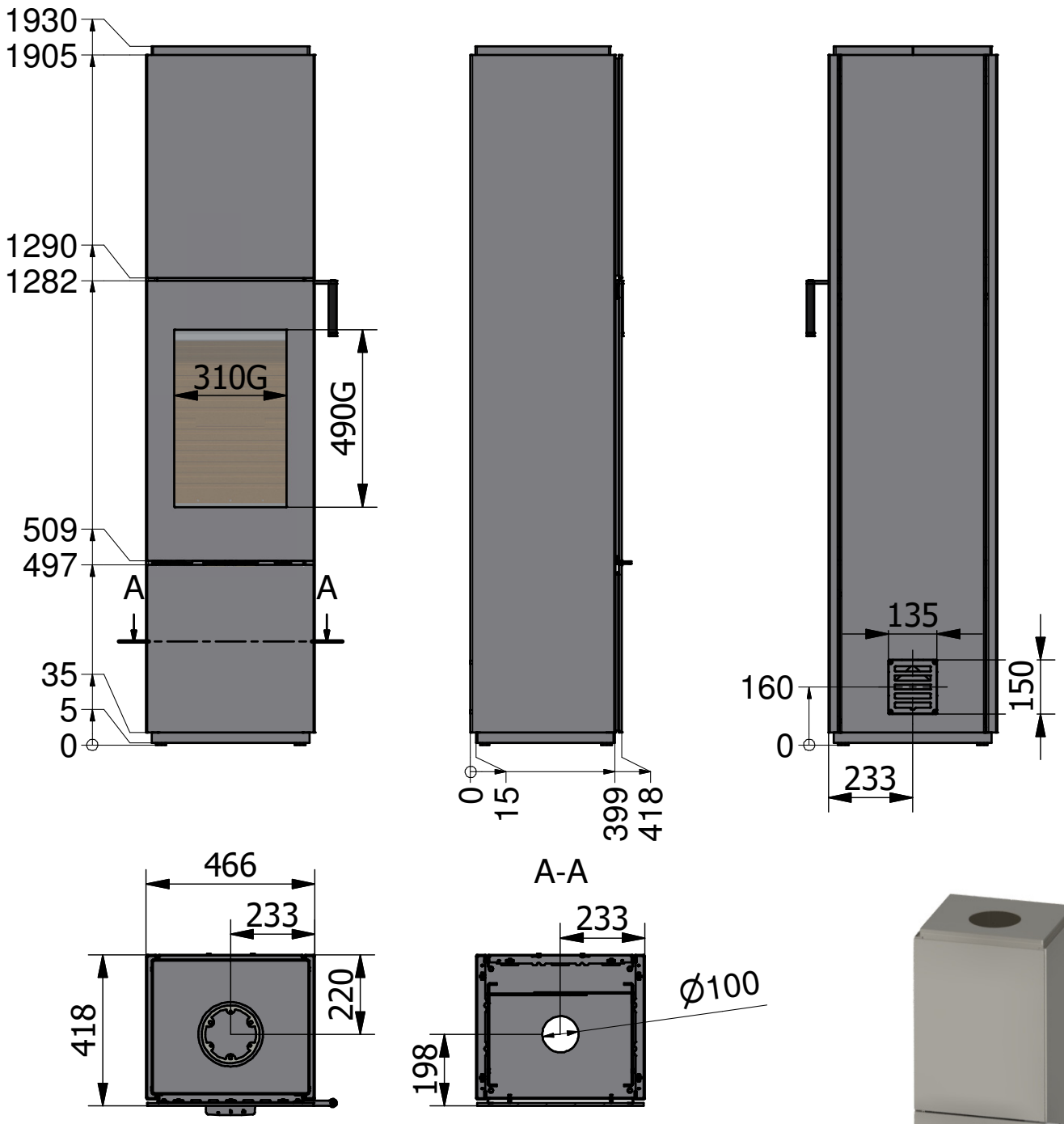

ENG

RECYCLING OF PACKAGING
The stove is delivered in recyclable packaging. This packaging must be disposed of in accordance with national regulations relating to the disposal of waste.

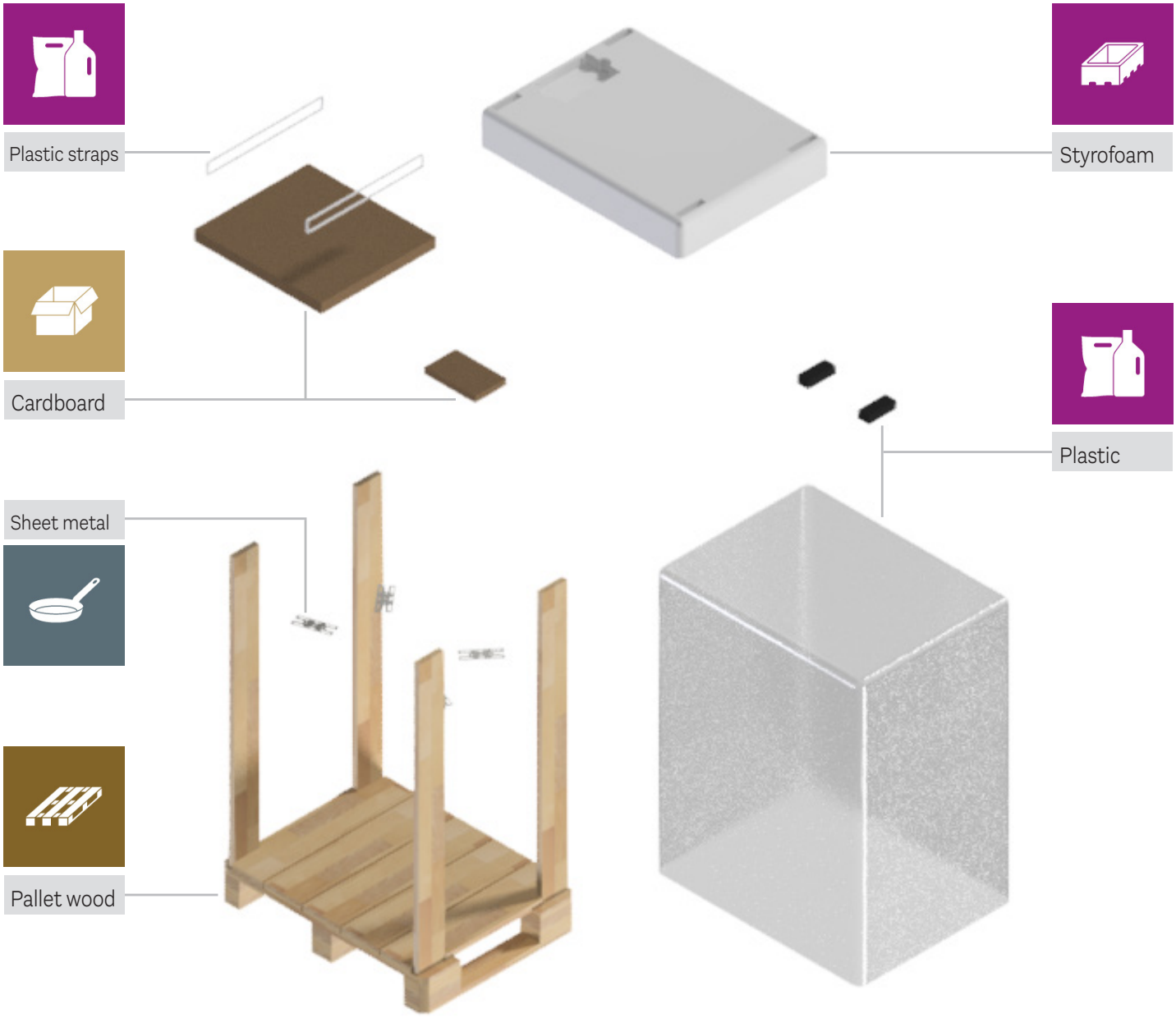

DISPOSAL AFTER END OF LIFE
When your stove can no longer be used in the distant future, it is important that it is disposed of correctly. At the end of the user manual you will find an overview of how to dispose of the stove itself at the end of its service life.

PACKAGING AT DELIVERY

Upon delivery, the stove is secured to a transport pallet using four transport safety fittings. The safety fittings are attached with screws which must be unscrewed. The safety fittings can then be removed.

HEIGHT ADJUSTMENT

There are four adjustment screws underneath the appliance. Make sure the stove is level by using the adjustment screws.

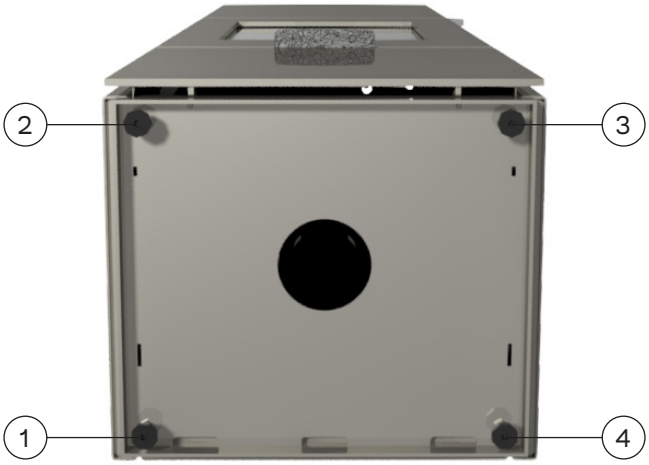

FITTING THE SMOKE OUTLET

The stove can be purchased with a top or rear outlet. Remove the top front panel to access the smoke outlet by lifting it up and pulling it out. Install the smoke outlet using the nuts and bolts provided.

MOUNTING/CHANGING THE HANDLES

On delivery, the stove is fitted with a temporary handle. This is removed by removing the screws. The new handle can then be mounted on the stove with the screws.

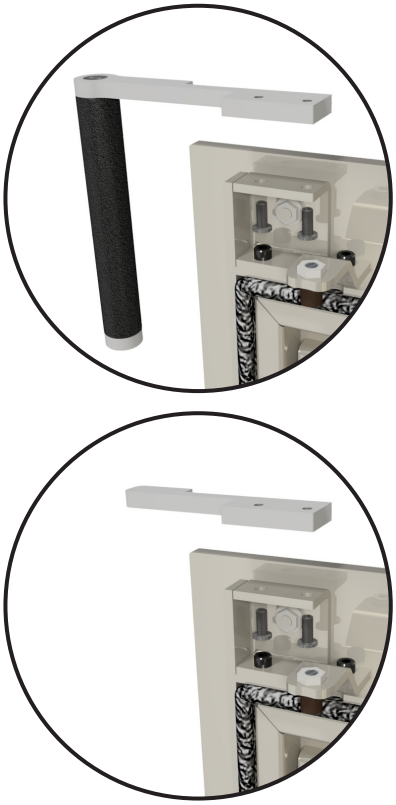

REMOVING THE COMBUSTION CHAMBER LINING

To reach the flue, carefully remove the vermiculite smoke deflector plate and the smoke baffle made of steel. Remove the fuse on both sides by pushing it up so that it clears the hole. Remove the smoke deflector plate by pulling it forwards and downwards so that the rear end is clear of the vertical plates. Remove the smoke baffle by lifting it up and forwards so that it comes free of the fixings. Then, carefully insert in reverse order. The same procedure is used when changing the chimney connection for access to the flap cover.

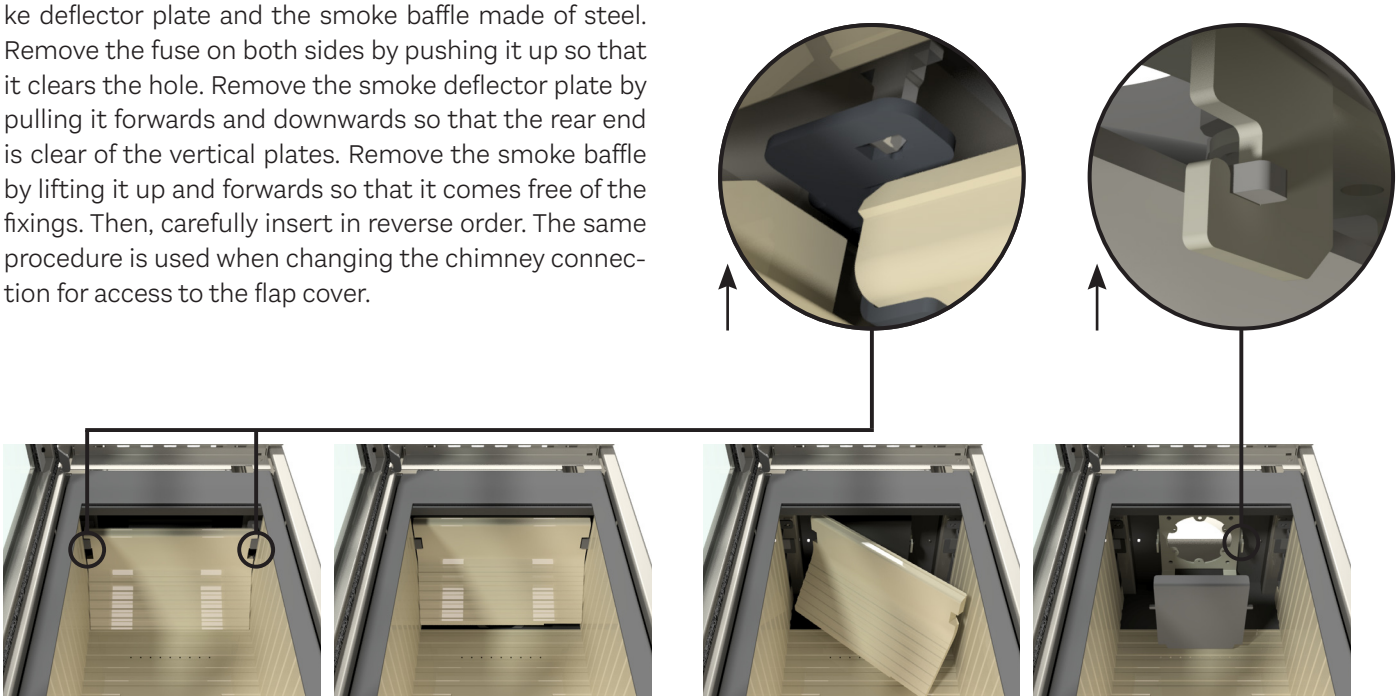

Remove the fuse, then remove the smoke deflector plate by pulling forwards and downwards

The smoke baffle by lifting it up and forwards to release it from the fixings

ATTENTION!
Take care when putting back the smoke deflector plates.

HEAT ACCUMULATION STONES

It is possible to install heat accumulation stones in the stove. First, install the base on which the stones will be placed. Place the layers as shown in the picture, offset by 90 degrees from each other.

OPAL (Top outlet) - 108 kg. corresponding to 18 Elements
OPAL (Rear outlet) - 60 kg. corresponding to 10 Elements

TOP OUTLET

REAR OUTLET

When the stove is installed in a construction where direct combustion air is required, external air must be connected to the stove from the outside. All RAIS/attika stoves have the option to supply external air.

This external air supply is what we call AirSystem. The air intake for the system can be hidden by installing it either in the floor or in the wall behind the stove. If you order a stove with AirSystem, it is installed before you receive it from us. All you have to do is connect it in your home.

The maximum length of the flex hose is 5 metres. It is important that it is not bent and folded around corners

ATTENTION!
In countries where legislation does not allow closing the air supply, the damper plate in the air valve must be removed.

AIR CONNECTION ON THE BACK
When purchasing an oven with rear air connection, make sure to remove the front panel and the grate at the back. The front panel is removed by pulling it free from the magnets so that it can be lifted off. Make sure that the hose clamp (1) and the flexible hose (4) are attached to the connector in the damper. Pull the flexible hose (4) out through the hole. Fit the air valve (3) and the gasket (2) on the wall above the hole leading to the outside. Fit the flexible hose (4) and the hose clamp (1) on the air valve (3). Then fit the cover (5). Finally, the front panel can be refitted.

1. Hose clamp
2. Gasket
3. Air valve
4. Flexible hose
5. Cover

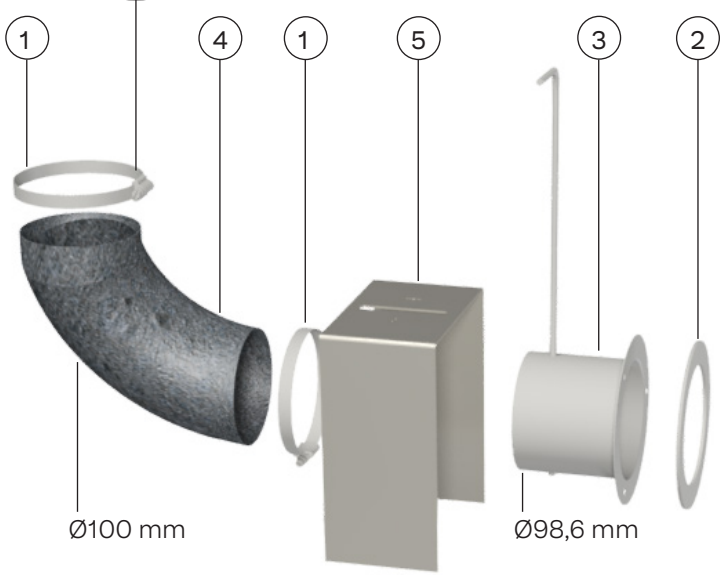

Open air valve

Closed air valve

so that the tube collapses and the airflow cannot get through as intended.

If the air supply is 5-10 metres from the stove, use a Ø120 mm flex hose instead.

The air valve must be set to the open position during use to allow outside air to enter the stove. If the stove is unused for a period of time, you can close the air vent to prevent cold air from entering the installation room.

AIR CONNECTION AT THE BOTTOM

When purchasing an oven with air connection via the bottom, make sure to remove the front panel and the grate at the back. The front panel is removed by pulling it free from the magnets so that it can be lifted off. Make sure that the hose clamp (1) and the flexible hose (4) are mounted on the connector in the damper. Then fit the air valve (3) and gasket (2) over the hole in the base plate. Fit the flexible hose (4) and the hose clamp (1) on the air valve (3). Install the gasket (5) over the hole leading to the outside. Finally, the front panel can be refitted.

Open air valve

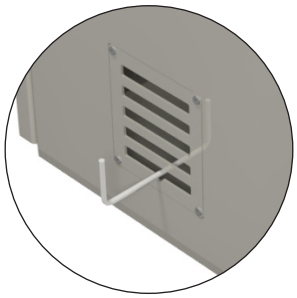

Closed air valve

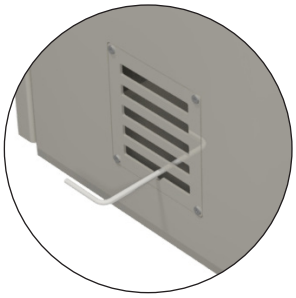

1. Hose clamp
2. Gasket
3. Air valve
4. Flexible hose
5. Gasket

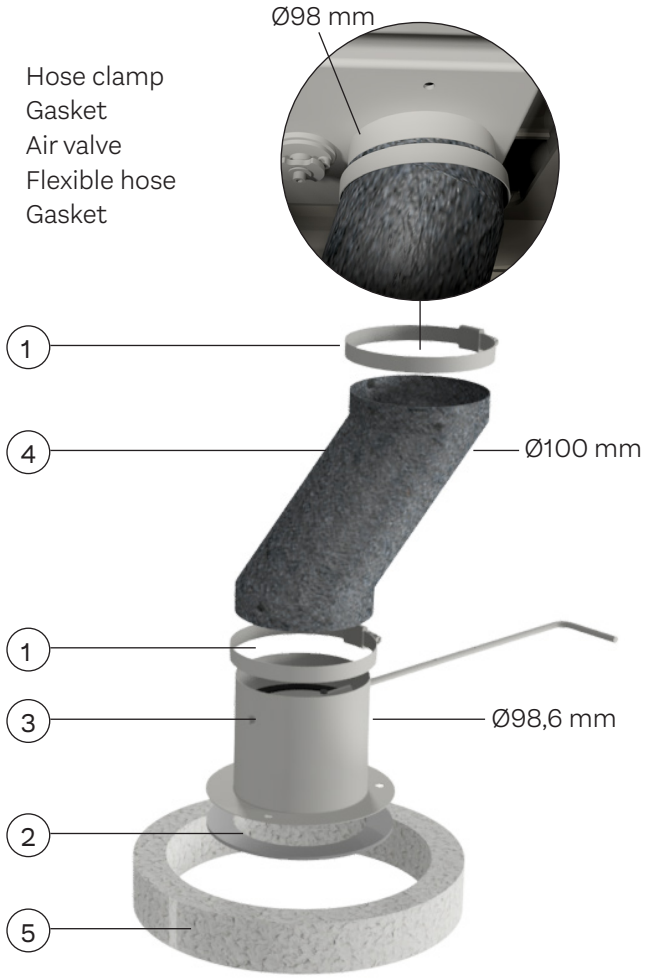

CLEANING AND MAINTENANCE

It is important that the stove is cleaned and maintained both inside and out. When this is done, the stove must be cold. The stove should be inspected by a chimney sweep once a year. Always check the chimney and flue collar for blockages before a heating season. Inspect the exterior and interior of the stove for damage, especially gaskets and the thermal insulation plates (vermiculite).

The combustion chamber lining protects the stove from heat from the fire. Due to the large temperature variations, cracks may appear in the combustion chamber lining. These can last for several years and should be replaced if they start to crack. The plates are loosely placed inside the combustion chamber and can easily be replaced by you or your dealer. For detailed instructions on how to replace the plates or remove them to clean the flue, see the user manual.

Lubricating door hinges and door locks is a necessary maintenance task that should be done on a regular basis rather than just after damage has occurred. It is advised that you use only our lubricant spray; using other products may cause residue and odour to form. To obtain the lubricant, contact with your dealer.

BLOCKING THE AIR INTAKE

The stove needs permanent and sufficient air in order to burn optimally and safely. The stove draws air from the gaps along the stove and under the stove, so it is important that there is air from the bottom edge to the floor. The levelling shoes must therefore not be adjusted all the way down so that no air can get under the stove. It is therefore important that the air intake areas are not blocked or closed, as the stove takes air from the room through these areas, among other things.

PERMANENT AIR SUPPLY
The appliance needs a permanent air supply to the room of installation as the appliance is over 5 kW, confer with Building regulation Approved Document J.

Permanently open air vents should be non-adjustable, sized to admit sufficient air for the purpose intended and positioned where they are unlikely to become blocked. see Approved Document J.

A CO Alarm must be fitted into the same room as the appliance upon installation. The alarm shal be compliant with British Standards BS 50291. Where battery powered alarms are selected, alarms with 'sealed for life' batteries rather than alarms with replaceable batteries are the better option.

THE CLEAN AIR ACT 1993 AND SMOKE CONTROL AREAS
Under the clean air act local authorities may declare the whole or part of the district of the authority to be a smoke control area. It is an offence to emit smoke from a chimney of a building, from a furnace or from any fixed boiler if located in a designated smoke control area. It is also an offence to acquire an "unauthorised fuel" for use within a smoke control area unless it is used in an "exempt" appliance ("exempted" from the controls which generally apply in the smoke control area).

In england appliances are exempted by publication on a list by the secretaryof state in accordance with changes made to sections 20 and 21 of the clean air act 1993 by section 15 of the deregulation act 2015. In scotland appliances are exempted by publication on a list by scottish ministers under section 50 of the regulatory reform (scotland) act 2014. Similarly, in northern ireland appliances are exempted by publication on a list by the department of agriculture, environment and rural affairs under section 16 of the environmental better regulation act (northern ireland) 2016. In wales appliances are exempted by regulations made by welsh ministers.

The secretary of state for environment, food and rural affairs has powers under the act to authorize smokeless fuels or exempt appliances for use in smoke control areas in england. In scotland and wales this power rests with the ministers in the devolved administrations for those countries. Separate legislation, the clean air (northern ireland) order 1981, applies in northern ireland. Therefore it is a requirement that fuels burnt or obtained for use in smoke control areas have been "authorised" in regulations and that appliances used to burn solid fuel in those areas (other than "authorised" fuels) have been exempted by an order made and signed by the secretary of state or minister in the devolved administrations.

The Opal (All variants) have been recommended as suitable for use in smoke control areas when burning wood logs.

FUEL OVERLOADING
The maximum amount of fuel specified in this manual should not be exceeded, overloading can cause excess smoke.

REFUELLING ON TO A LOW FIRE BED
If there is insufficient burning material in the firebed to light a new fuel charge, excessive smoke emission can occur. Refuelling must be carried out onto a sufficient quantity of glowing embers and ash that the new fuel charge will ignite in a reasonable period. If there are too few embers in the fire bed add suitable kindling to prevent excess smoke.

DAMPERS LEFT OPEN
Operation with the air control or appliance dampers open can cause excess smoke. The appliance must not be operated with air controls, appliance dampers or door left open except as directed in the instructions.

OPERATION WITH DOOR LEFT OPEN
Operation with the door open can cause excess smoke. The appliance must not be operated with the appliance door left open except as directed in the instructions.

ATTENTION!
This page is only relevant for appliances installed in United Kingdom.

Article number: 15-6524ENG
5 708252 442382

RAIS A/S
Industrivej 20
DK-9900 Frederikshavn
Denmark
www.rais.com

ATTIKA FEUER AG
Brunnmatt 16
CH-6330 Cham
Switzerland
www.attika.ch